CRISTINA

Spare Parts List

CRIBA10013 | Blade Series | Matt Black

How to request a replacement

Quote CRIBA10013, purchase details and a photograph of the installed item and required component. Identify the component using the original Cristina exploded view appended to this list.

Manufacturer reference	Selection
CRIAR16601Q00	Common reference
CRICR17734Q00	Common reference
CRIMV17086D51	Common reference
CRIMV2955P...	Finish 13
CRIPD051...	Finish 13
CRIPD102...	Finish 13
CRIPD449...	Finish 13
CRIPR14794Q...	Finish 13
CRIPR2364Q00	Common reference
CRIPZ24895P...	Finish 13
CRIPZ24896P...	Finish 13
CRIRS5603F...	Finish 13
CRIVR6713Q00	Common reference

Finish-dependent references

References shown with three dots are part families, not complete order codes. Use finish 13 Matt Black. The list selects families shown for this finish in Cristina's model table and common references. Confirm the complete order reference against the appended exploded view and the supplied product revision before ordering.

Manufacturer model: CRIBA100. Original Cristina spare-parts sheet follows; it retains the manufacturer callouts and revision.

BLADE

CRIBA100

SCHEDA RICAMBI | SPARE PARTS SHEET
rev.01_02/2025

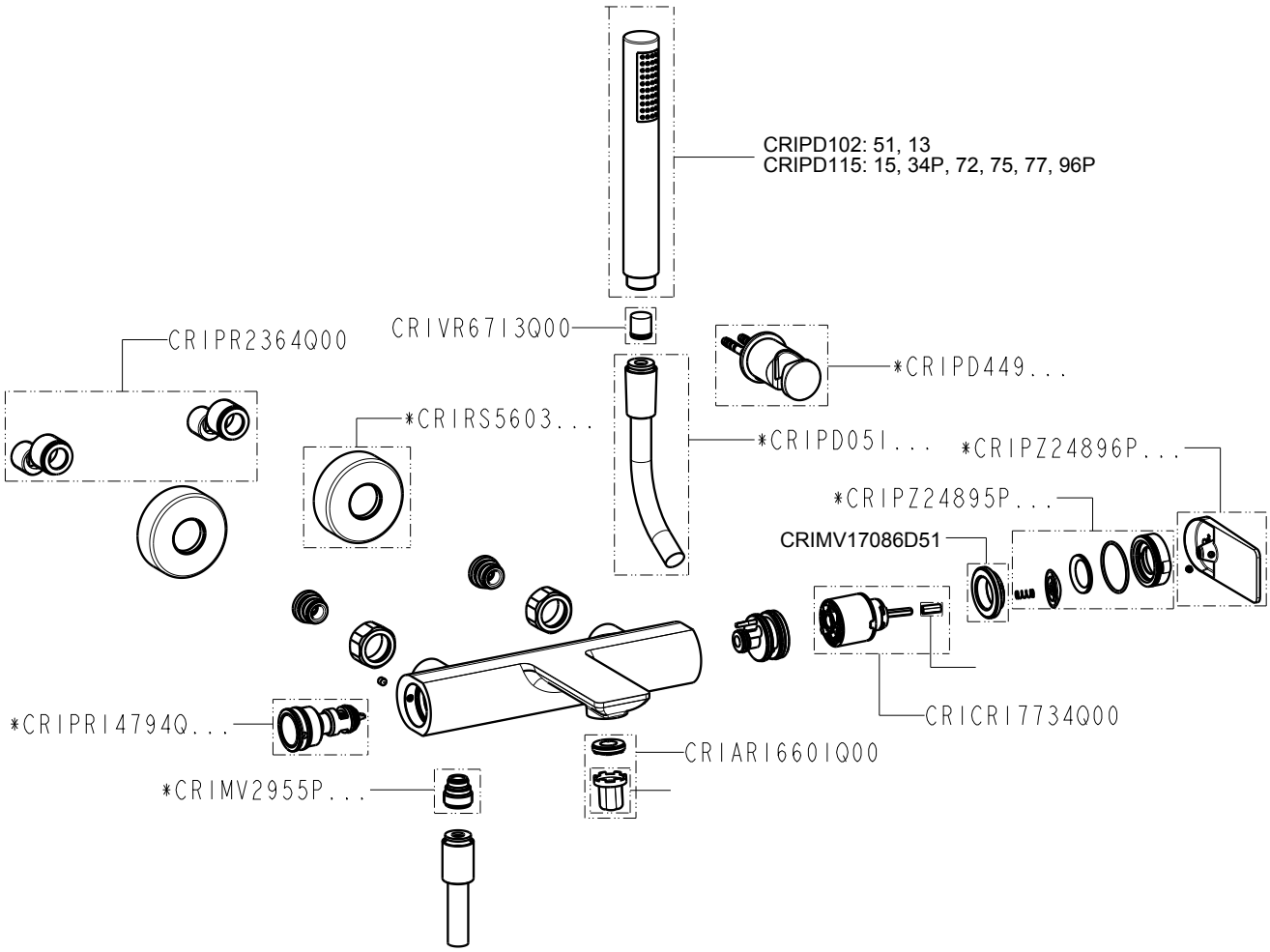

NOTE | NOTES

* completare con codice finitura | complete with finishing code

CRISTINA S.r.l. a socio unico
via G. Fava, 56 - 28024 Gozzano (NO) Italy - phone +39 0322 9545
fax +39 0322 956556 - info@cristinagroup.com
cristinarubinetterie.com

CRISTINA
RUBINETTERIE